HL Series

HL520

AIR-OIL HEAT EXCHANGERS

IP68 | 12/24 Volt | Ventilation A/Pulling P/Pushing

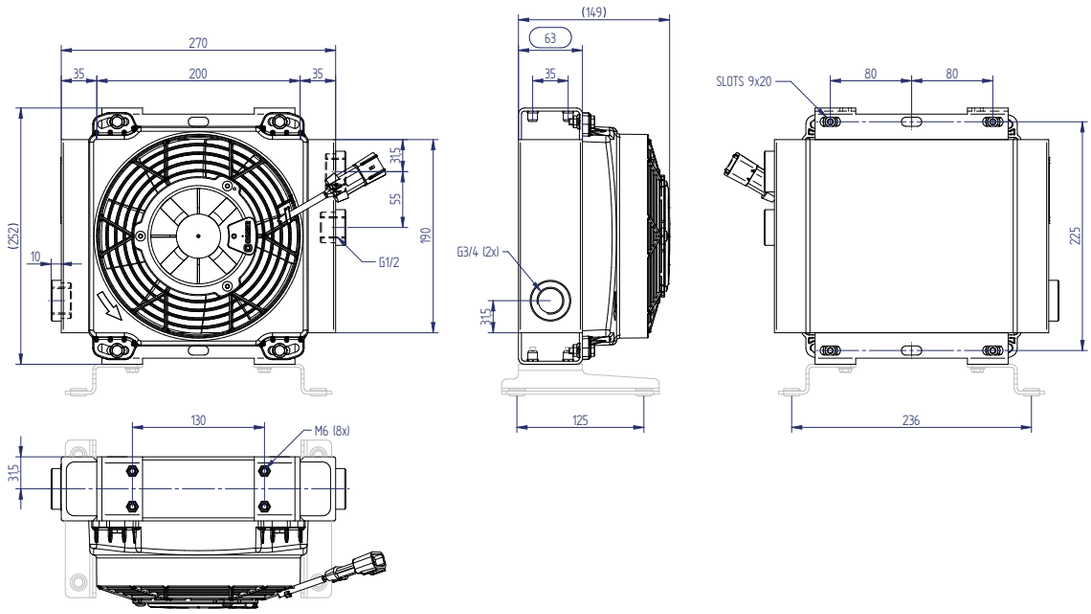

Performance

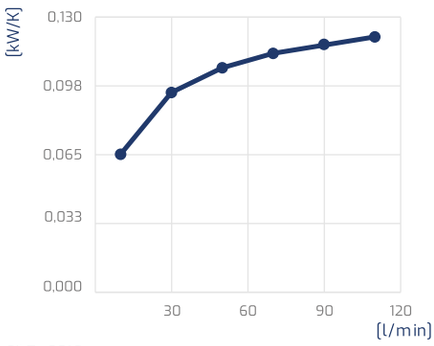

Oil T 80°C
T Amb. 40°C
1 kW = 860 Kcal/h – 1HP = 0,75 kW

Pressure drop

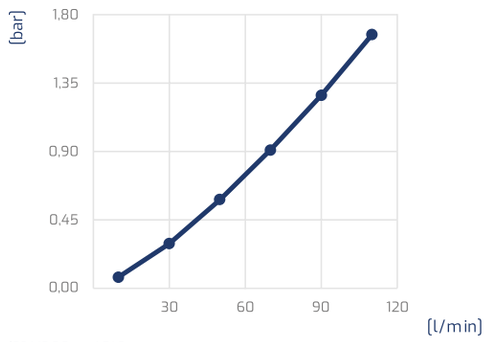

ISO VG 32 at 40°C

Viscosity - ISO VG 32 Oil

Oil	22	**32**	46	68	150
Correction factor				1,6	3

Technical data

Item	Oil flow	Weight	Voltage	Current absorption	Ø Fan	Air flow
	[l/min]	[kg]	[V]	[A]	[mm]	[m^3/h]
HL520112VA/P	10 - 100	4,5	12	8,6	190	630
HL520124VA/P	10 - 100	4,5	24	4,3	190	630

Packaging

Packaging	Dimensions	Total gross weight Kg (including pallet)
n.5 pcs	80x80x50	29,5
n.10 pcs	80x80x50	52
n.20 pcs	80x120x65	104
n.30 pcs	80x120x85	149